360

LED task light

Distinctively designed award-winning LED task light with outstanding functionality. The rotating base and flexible spring-balanced pivoting arm occupy a small footprint when the task light is positioned over the base. When fully extended, the light covers a large area providing broad, asymmetric and ergonomically correct workspace lighting. 360 is dimmable and has a 9/4 hour automatic shut-off to save energy. Table/desk base mount.

Colors: White, black or silver grey.

LED: Lightsource of the future
360 is equipped with state-of-the-art LEDs, which provide bright, warm light and have a life expectancy of 50,000+ hours. That means 25 years or more with normal office use. You may never have to change the lightsource.

- Follow this link to learn more about Luxo workspace lighting

360

360

360

TECHNICAL DESCRIPTION

LIGHTSOURCE

Supplied with 1 x integrated LED module 6W (7.4W total energy consumed). Correlated color temperature (CCT) is 3250ºK. Color rendering index (CRI) is 90.

BODY MATERIAL AND COLOR

Full metal body made of zinc. Colors: black, silver grey or white.

MOUNTING

Standard with table/desk base.

OPTICS

Asymmetric light output. White, polycarbonate reflectors.

POWER SUPPLY

Plug-in 120V power supply.

ARM TECHNOLOGY AND MOVEMENT

18.5" parallel, two-pivot arm. Side-to-side head movement.

Integrated 9/4 hour auto shut-off feature.

The Company reserves the right to change any product specifications without prior notification.

360

MEASUREMENT DRAWINGS

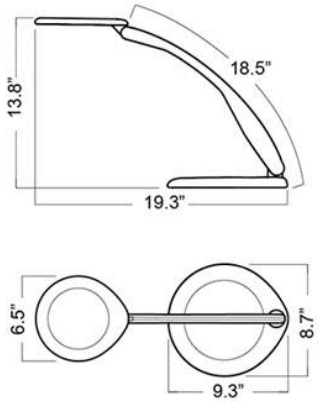

360

LIGHT MEASUREMENT DRAWINGS

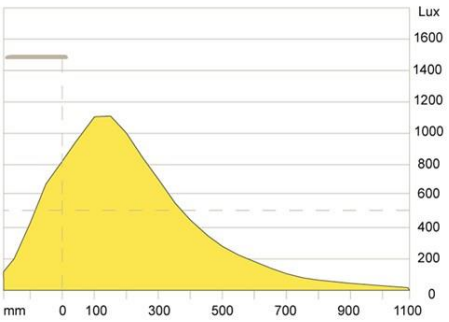

360

GALLERY

360

360

360

360